Base PDU-B40

EN 1.2026

Safety and maintenance information

Litex Promo Sp. z o.o. advises that you must read and follow these operating instructions before using the parasol base.

The manufacturer, Litex Promo Sp. z o.o., shall not be liable for any damage resulting from failure to comply with this manual.
The General Terms and Conditions available at https://litexpromo.com/terms-condition/ apply to sales made to the Buyer.

The base has been designed as a weight for an parasol and is intended solely for this purpose. It must only be used:
- for its intended purpose, i.e. as a weight for an parasol,
- in good working order, i.e. without cracks, damage to metal parts, broken handles or protruding wires.

Any faults that may affect the safety and functionality of the parasol base must be rectified immediately; otherwise, further use is prohibited. Minor damage (scratches, dents, small chips in the concrete) is acceptable and does not affect the safe use of the product.

All actions specified in the instructions must be carried out as described in the instructions.

Any faults or defects found must be discussed with the seller. Self-repairs are not permitted and are carried out at the buyer's sole risk.

Warning
The base must be transported and installed by at least two people.
The parasol base is intended for use by adults only. It is not suitable for use by children or people requiring special care.

The parasol base must be levelled.

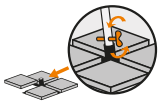

The parasol base must be placed on a stable, hard surface.
The parasol must be secured to the base using the dedicated bolt.

> ...

The parasol base must be designed specifically for the relevant type of parasol, as stated by the manufacturer (the icon on the parasol label – see example opposite – indicates that the base must weigh more than … kg).
The weight of the base depends on the parasol model.

Warning: Risk of injury!
The product is heavy – take particular care when moving the base. Before starting assembly, ensure that the parasol base is securely fitted and stands firmly. Due to the weight of the base, it should be carried by at least two adults. Once the base is in place, insert the parasol into the base socket and secure it by threading and tightening the locking screw included in the set.
Tighten the screw as far as it will go. During use, the user must regularly check that all screws on the base, the base cap and those connecting the cap to the parasol are tight.

Maintenance and care
The customer should thoroughly inspect the base after initial assembly. A technical inspection of the base should be carried out at least once a year. We recommend paying particular attention to the joints between structural components, any corrosion of materials and their strength. It is recommended to:
- check the condition of the umbrella base and replace any damaged parts,
- check that all bolts are tight and tighten any that are loose,
- check the condition of the zinc coating; if the zinc layer has worn away, it must be re-coated.
- To increase the durability of the concrete, it can be impregnated once the concrete has been cleaned and is dry, preferably around 4 weeks after first use.

Storage
The base and all its components should be stored under cover. To prevent corrosion, the base must be protected from moisture.

Service and spare parts
If you have any questions about installation or ordering spare parts, please contact Customer Service (contact at www.litex.pl or by e-mail at info@litex.pl). In case of complaint, please register it via the complaint form available at www.litex.pl.

Support
Do you have any doubts? Is something unclear? You've got doubts? Not everything is understandable? Contact us: e-mail: info@litex.pl

www.litex.pl
Litex Promo Sp. z o.o.
ul. Staroprzygodzka 117, 63-400 Ostrów Wielkopolski, POLAND
tel.: +48 62 737 57 00, e-mail: info@litex.pl

Base PDU-B40

EN 1.2026

Assembly instructions

Contents of the pack

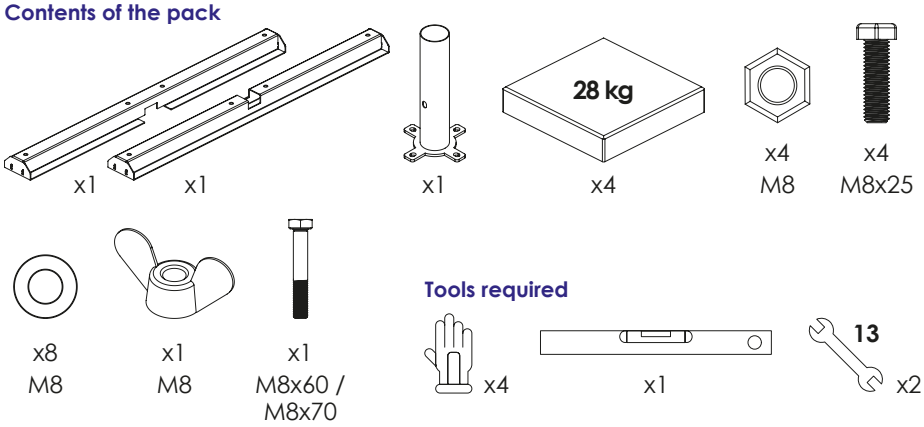

Tools required

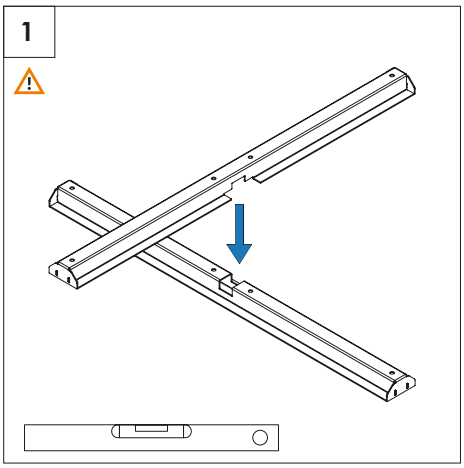

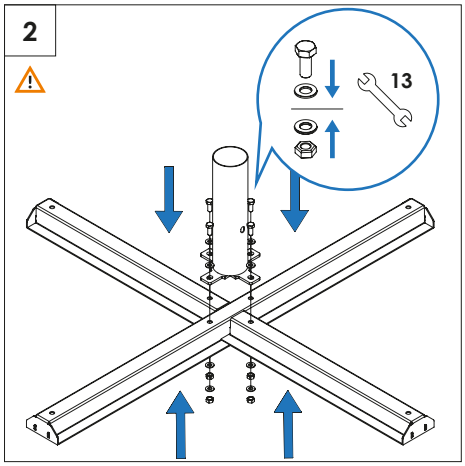

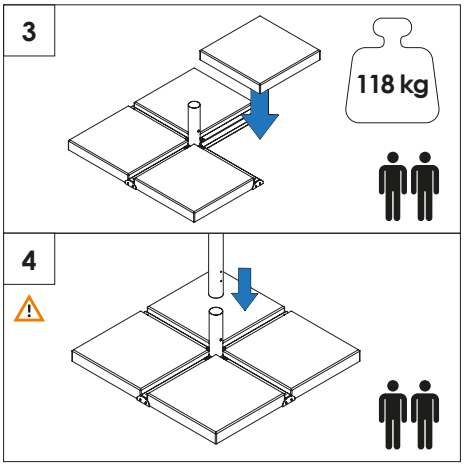

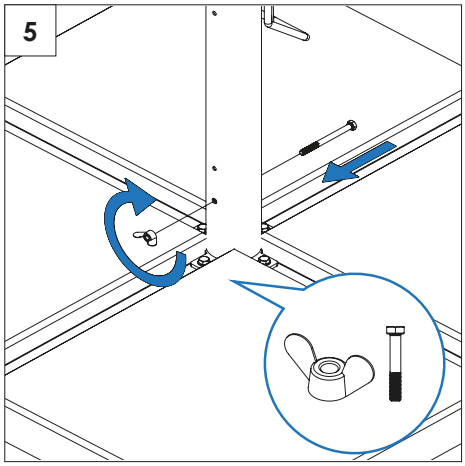

Disassembly diagram

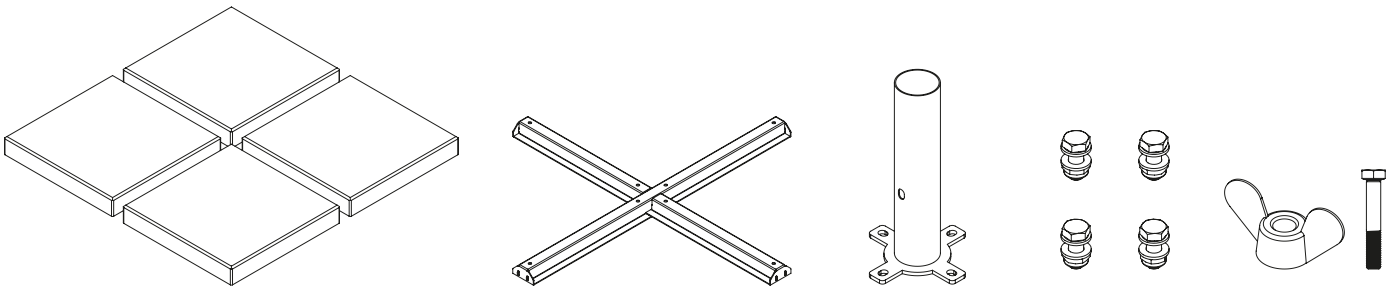

Concrete | Steel | Steel | Steel | Steel

Tools required

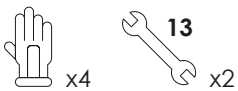

40 FE Steel

Shelf life: until the product retains its functional value. Disassembly is to be carried out by the product owner.
Recycling method for all materials: sort by material. Manual labour required.

www.litex.pl
Litex Promo Sp. z o.o.
ul. Staroprzygodzka 117, 63-400 Ostrów Wielkopolski, POLAND
tel.: +48 62 737 57 00, e-mail: info@litex.pl