Base PDZ5

EN 1.2026

Safety and maintenance information

Litex Promo Sp. z o.o. advises that you must read and follow these operating instructions before using the parasol base.

The manufacturer, Litex Promo Sp. z o.o., shall not be liable for any damage resulting from failure to comply with this manual.
The General Terms and Conditions available at https://litexpromo.com/terms-condition/ apply to sales made to the Buyer.

The base has been designed to securely anchor the parasol in the ground and is intended solely for this purpose. It must only be used:
- for its intended purpose, i.e. to anchor the parasol in the ground,
- in good working order, i.e. free from damage.

Any faults that may affect the safety and functionality of the parasol base must be rectified immediately; otherwise, further use is prohibited. Minor damage (scratches, dents) is acceptable and does not affect the safe use of the product.

All actions specified in the instructions must be carried out as described in the instructions.

Any faults or defects found must be discussed with the seller. Self-repairs are not permitted and are carried out at the buyer's sole risk.

Warning
The parasol base is intended for use by adults only. It is not suitable for use by children or people requiring special care.
The base must be permanently secured in stable and suitably prepared ground, in accordance with the assembly instructions.
The parasol must be correctly fitted into the base and secured using the dedicated screw.

The parasol base must be levelled.

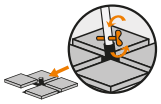

The parasol base must be placed on a stable, hard surface.
The parasol must be secured to the base using the dedicated bolt.

> ...

The parasol base must be designed specifically for the relevant type of parasol, as stated by the manufacturer (the icon on the parasol label – see example opposite – indicates that the base must weigh more than ... kg).
The weight of the base depends on the parasol model.

Warning: Risk of injury!
Before proceeding with the installation of the parasol, ensure that the base has been correctly and securely fixed to the ground, in accordance with the assembly instructions. Next, insert the parasol into the base and secure it by threading and tightening the securing screw supplied with the set. Tighten the screw as far as it will go. During use, the user must regularly check that all screws are tight.

Maintenance and care
The customer should thoroughly inspect the base after initial assembly. A technical inspection of the base should be carried out at least once a year. We recommend paying particular attention to the joints between structural components, any corrosion of materials and their strength. It is recommended to:
- check the condition of the umbrella base and replace any damaged parts,
- check that all bolts are tight and tighten any that are loose,
- check the condition of the zinc coating; if the zinc layer has worn away, it must be re-coated.

Storage
At the end of the season, for safety reasons, unscrew the top cap and store it under cover, in a dry place, to prevent corrosion.

Service and spare parts
If you have any questions about installation or ordering spare parts, please contact Customer Service (contact at www.litex.pl or by e-mail at info@litex.pl). In case of complaint, please register it via the complaint form available at www.litex.pl.

Support
Do you have any doubts? Is something unclear? You've got doubts? Not everything is understandable? Contact us: e-mail: info@litex.pl

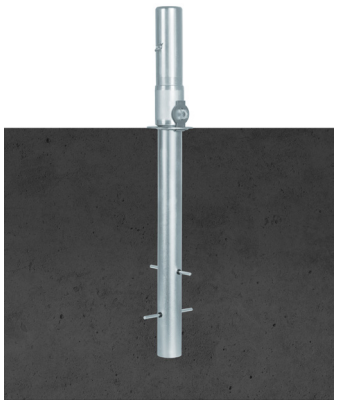

www.litex.pl
Litex Promo Sp. z o.o.
ul. Staroprzygodzka 117, 63-400 Ostrów Wielkopolski, POLAND
tel.: +48 62 737 57 00, e-mail: info@litex.pl

Base PDZ5

EN 1.2026

Assembly instructions

Contents of the pack

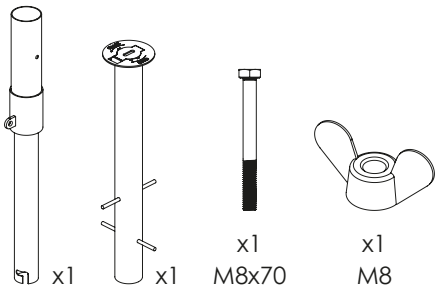

Tools required

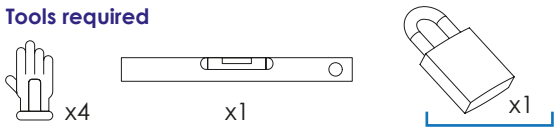

The padlock is not included in the set and must be purchased separately

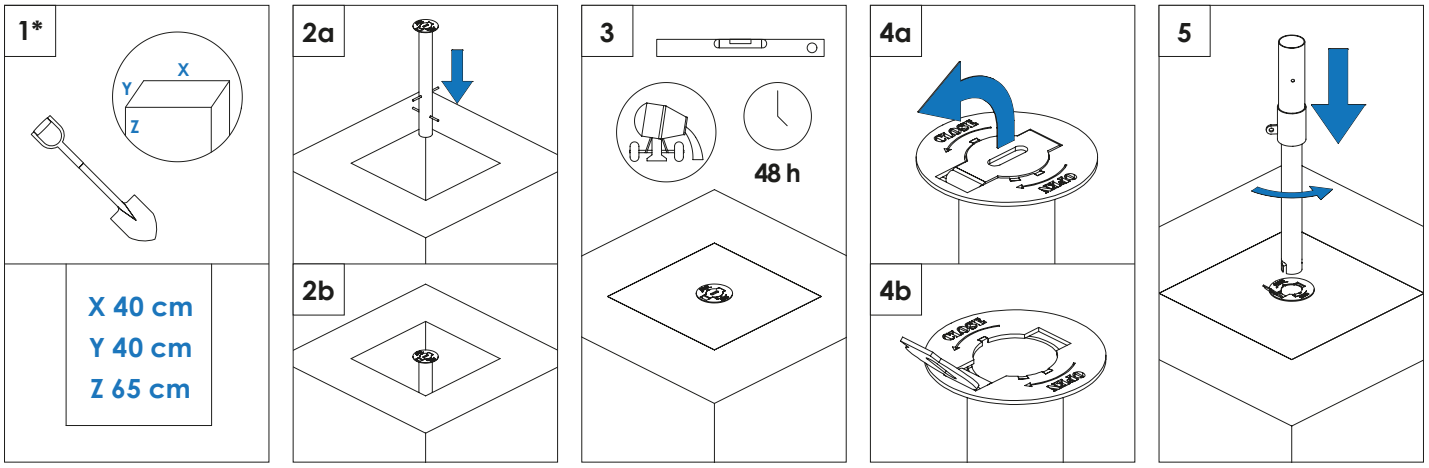

*The final dimensions should be adjusted to the ground conditions.

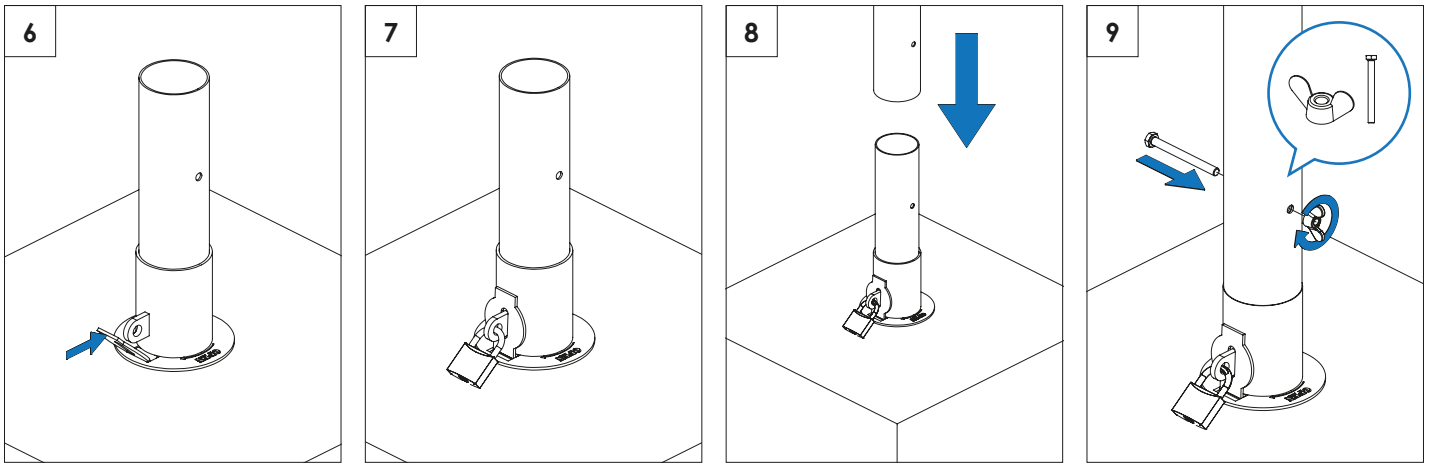

Disassembly diagram

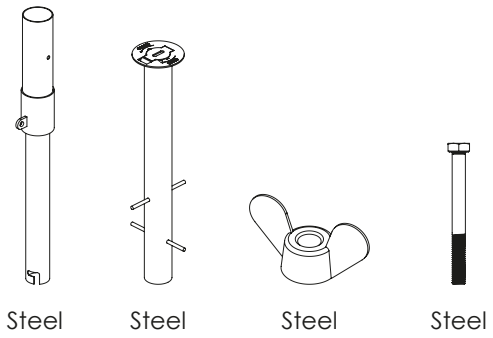

Tools required

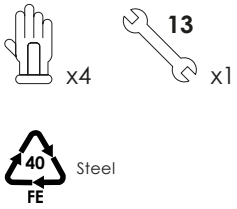

Shelf life: until the product retains its functional value.
Disassembly is to be carried out by the product owner.
Recycling method for all materials: sort by material.
Manual labour required.

www.litex.pl
Litex Promo Sp. z o.o.
ul. Staroprzygodzka 117, 63-400 Ostrów Wielkopolski, POLAND
tel.: +48 62 737 57 00, e-mail: info@litex.pl